Luminex
NETWORK INTELLIGENCE

PRODUCT SPECIFICATIONS

GIGACORE O26-I
20S10-4S25-2S40

Description: Technical specifications GigaCore O26-I

Luminex reserves the right to modify the technical specifications at any given time without prior notice.
No rights can be claimed from these specifications.

MADE IN BELGIUM

Gigabit Ethernet switch

The GigaCore O26-I, part of Luminex' Omega Series, is a 40 Gigabit Ethernet switch designed for AV integration, fixed installation, and touring applications, with support for the most advanced AV protocols. It provides an ideal high-bandwidth backbone for advanced professional AV networks in both star and mesh topologies.

Each GigaCore can be configured through an intuitive built-in AV Web UI. In addition, system-wide and consistent management across the Luminex network is possible with Araneo, Luminex's network monitoring, planning, and management software. Araneo helps increase productivity, strengthens confidence in the network, significantly reduces commissioning time, and enables management and supervision of the complete network from a single application.

The GigaCore O26-I is an essential component in AV networks that require high bandwidth, reliability, and fast, straightforward deployment. The GigaCore O26-I is designed to simplify network deployment by handling most AV protocols out of the box. It includes predefined QoS/DiffServ (Quality of Service) settings, optimized IGMP (Internet Group Management Protocol) per group (VLAN), and predefined yet editable groups (VLANs) that make it easy to separate network traffic across different applications, enabling converged networks to be implemented in a clear, reliable, and efficient manner. It also includes the advanced automated redundancy protocol RLinkX, which supports redundant links and ring topologies within the GigaCore network.

Bandwidth, connectivity, and port availability are addressed with 20 independent SFP+ ports supporting data rates of up to 10 Gbps, 4 SFP28 ports supporting up to 25 Gbps, and 2 QSFP ports supporting data rates of up to 40 Gbps.

Time synchronization is critical in many applications. The GigaCore O26-I is a hassle-free PTPv2-enabled switch that supports most major audio protocols, including RAVENNA/AES67, Milan AVB, ST 2110, Dante, and Q-SYS/Q-LAN, without requiring complex device configuration.

With two built-in power supplies, the GigaCore O26-I provides power redundancy within a single 1U rack space.

The GigaCore O26-I also features Luminex's signature per-port RGB group LEDs, allowing clear identification of the group (VLAN) assignment for each port.

Applications:

- Large system integrations
- Theaters
- Concert halls
- Convention centers
- Sports arenas
- Broadcast and recording studios, OB vans
- Cruise ships
- Theme parks
- Hospitality installs (Hotels etc)
- And other fixed installations
- ...

ORDERING INFORMATION	
Product name:	Part number:
GigaCore O26-I – 20S10-4S25-2S40	**LU 01 00101**

APPLICATION DRAWING

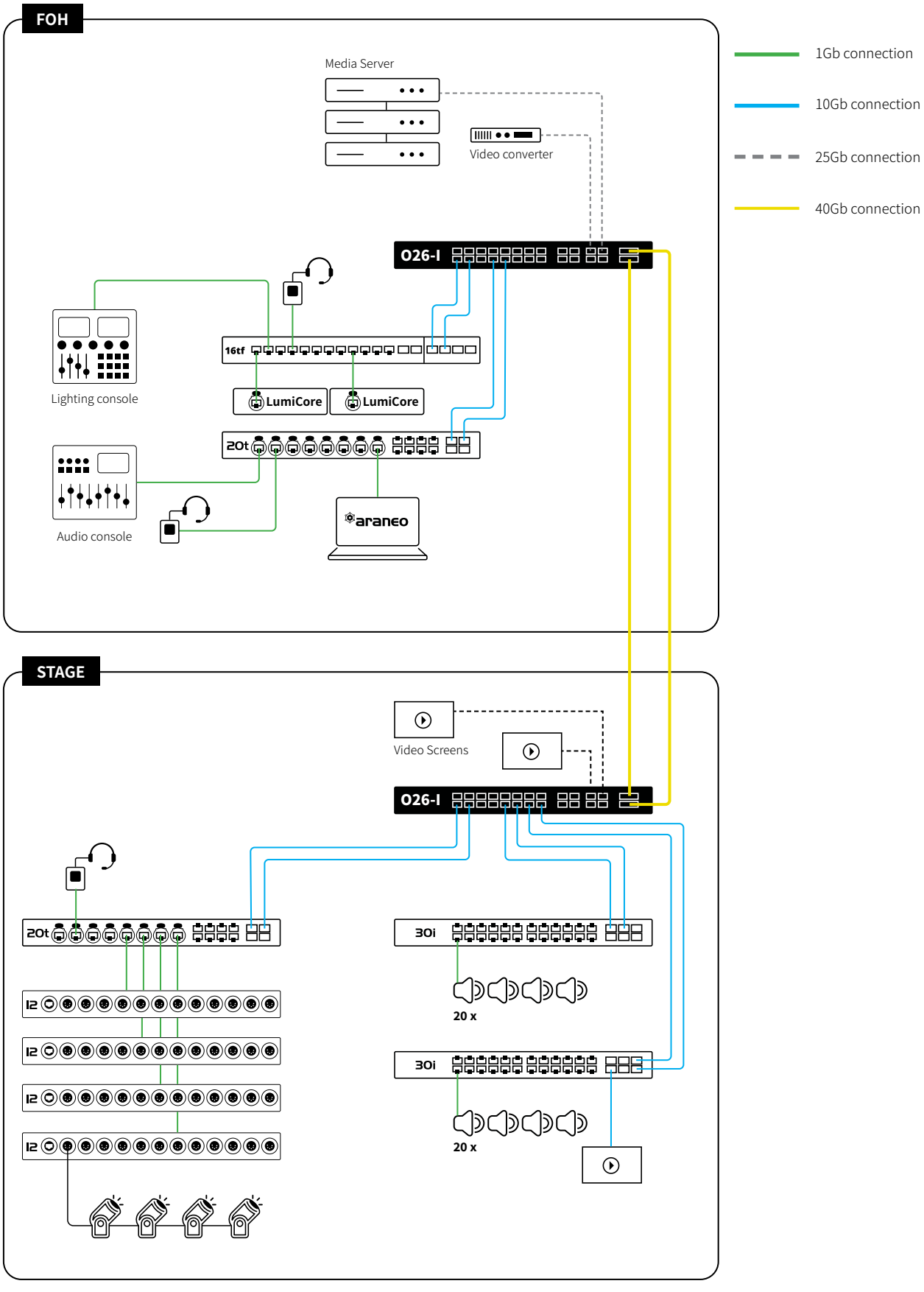

TECHNICAL SPECIFICATIONS

MECHANICAL	
Enclosure	Robust all metal housing
Dimensions (WxDxH)	482 x 249,6 x 44 mm (19" x 9,82" x 1,73")
Material thickness	1 mm
Mounting Type	Rack mount, 2 positions - normal / recessed
Weight	3.86kg
Packaging Dimensions	545 x 335 x 125 mm
Packaged Weight	4.21kg
CONNECTIVITY	
Network	20x 10 Gbps / 1 Gbps SFP+ cages on front panel 4x 25Gbps SFP28 cages on front panel 2x40Gbps QSFP cages on front panel
Serial	No
Out-of band connection	No
Power	PowerCON True1 in: 1x for each built-in power supply (2 PSU's built-in)
Backup power	PowerCON True1 in: 1x for each built-in power supply (2 PSU's built-in)
TEMPERATURE MANAGEMENT	
Intelligent Control	Yes
Number of fans	3
Position of fans	Rear panel
Airflow Direction	Front to rear
USER INTERFACE	
Device status	RGB LEDs • Device • Power • RLinkX
Port status	Port Speed/Activity Port Status (RGB) • Group indication • RLinkX indication • MultiLinkX indication
10GBPS SFP+ PORT SPECIFICATIONS	
SFP cage type	SFF-8431 (SFP+, backward compatible with SFP)
Port speed	10G BASE-X or 1000 BASE-X
Port sensing	Fixed speed
25GBPS SFP28 PORT SPECIFICATIONS	
SFP cage type	SFF-8402 (SFP28, backward compatible with SFP+)
Port speed	25G BASE-X or 10G BASE-X
Port sensing	Fixed speed
40GBPS QSFP PORT SPECIFICATIONS	
SFP cage type	SFF-8436 (QSFP)
Port speed	40G BASE-X, 4 x 10G BASE-X
Port sensing	Fixed speed

SWITCH FEATURES	
Boot time	78s
Redundant links (RLinkX)	Yes
Link Aggregation (MultiLinkX)	Yes
Group function (VLANS)	Yes
Ethernet compliance	IEEE 802.2 IEEE 802.3 IEEE 802.3u IEEE 802.3x Flow Control IEEE 802.3ab Gigabit Ethernet IEEE 802.3ae IEEE 802.3by IEEE 802.3ba 40Gbps IEEE 802.1ax IEEE 802.1p CoS IEEE 802.1d Spanning Tree IEEE 802.1w Rapid Spanning Tree IEEE 802.1s Multiple Spanning Tree IEEE 802.1Q VLAN IEEE 802.1Qav MVRP IEEE 802.1 BA-2011 -> AVB (Audio Video Bridging) IEEE 802.1ab LLDP IEEE 1588-2008 PTPv2 IETF RFC2710 IETF RFC3810
Jumbo frames	Yes, supported up to 9216 bytes MTU (with restrictions when using AVB)
Supported protocols	Milan AVB (free of license) Dante RAVENNA/AES67 Ethersound Q-SYS/Q-LAN IPMX sACN ArtNet MANet HogNet RTTrPL (BlackTrax) ST2110 …
Audio protocol compliance	Yes, low jitter and hardware timestamping (IEEE 1588-2008)
Ethernet switch type	Full non- blocking wire-speed switching performance
Memory	1GB NAND - 8Mb NOR , 1GB RAM
Mac Adress table	32768 entries
Adress learning / aging	Self learning, Auto aging
Switching Capacity (Full duplex)	760Gbps (Full duplex)
Switching thoughput 64Byte	565.48Mpps
IGMP Querrier	Yes (V1|V2|V3)
IGMP Snooping	Yes, enabled by default (V1|V2|V3)
MLD	Yes, enabled by default

L3 Routing	IP interface per Group (VLAN) / Unicast routing
DHCP server	Yes
Firmware upgrades	Via WebUI or network wide with Araneo - Contingency option with second FW file stored
TAA Compliant	Yes
POWER	
Power input	100-240 VAC
Backup power	Yes
Power consumption	max 105W
ENVIRONMENTAL	
Operating temperature	0 to +50 °C
Storage temperature	-40 to +70 °C
Humidity (non condensing)	5 to 95% RH
NOISE LEVEL	
Noise level @ 1m	-
BTU	
	Max 358.26 BTU/hr
APPROVALS	
Electromagnetic emmissions and immunity	FCC Part 15 CFR 47 class A CAN/ICES-003 EN 61000 EN 55032 EN 55024
Safety	IEC 62368-1 EN 62368-1 UL 62368-1 CAN/CSA-C22.2 No. 62368-1
Certificates and approvals	cSGSus Mark (UL) CE Mark UKCA Mark CB Certificate
Green	RoHS REACH


GIGACORE O26-I

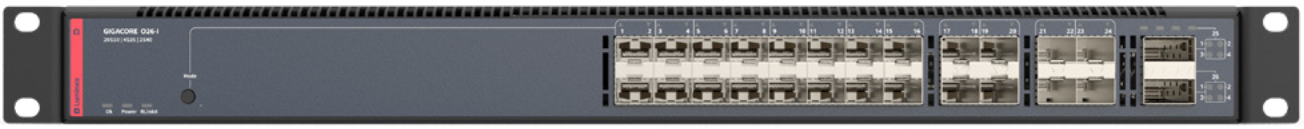
GIGACORE O26-I


GIGACORE O26-I
PSU 1
PSU 2